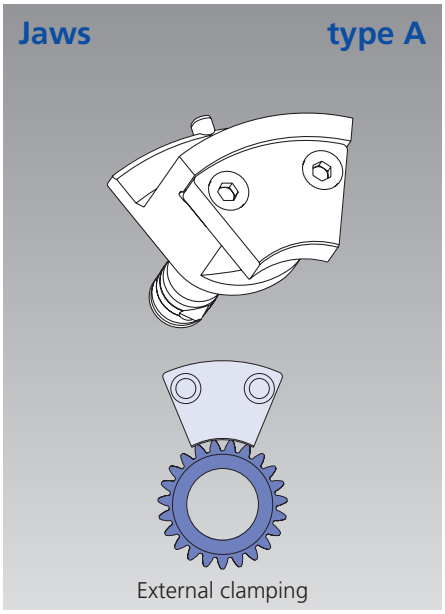

External clamping

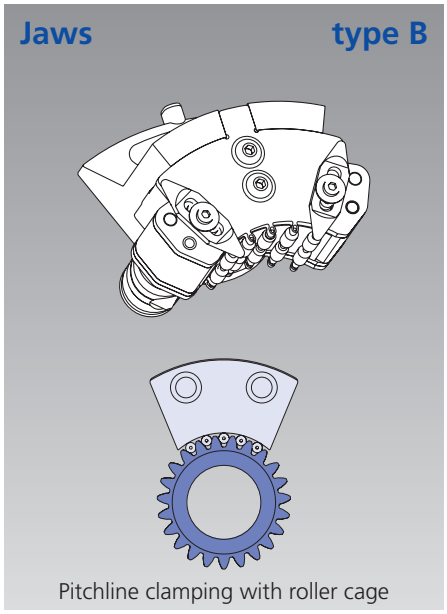

Pitchline clamping with roller cage

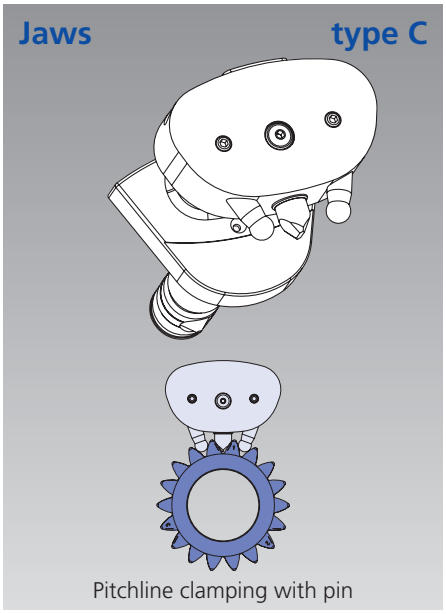

Pitchline clamping with pin

Actuating cylinder ZHVD-DFR for D-KOMBI®

Technical features

- Special double piston cylinder to actuate D-KOMBI
- 2 independent pistons for diaphragm jaws and axial swing clamp drive
- Rotating unions for 1 or 2 media
- 2 Linear Position Systems LPS for monitoring of the piston strokes

Standard equipment

- Cylinder with kit for LPS, without LPS position sensor

LPS see page 241

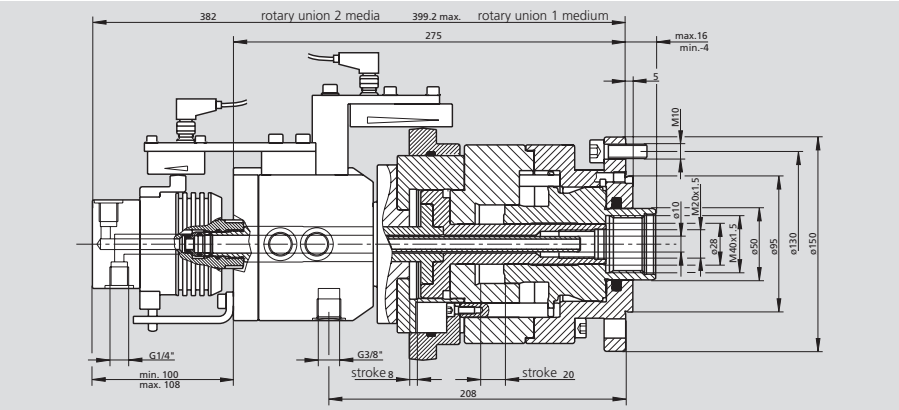

ZHVD-DFR for rotary union 1 medium Id. No. 044865 (without rotary union)*
ZHVD-DFR with rotary union 2 media Id. No. 044866 (rotary union 2 media included)

Piston surface				Pressure	Speed	Leakage	Weight	Moment of	Weight of	Weight of
Axial finger (K1)		Diaphragm (K2)		min./max.	max.	at 30 bar 50°C	cylinder	inertia	rotary union	rotary union
A	B	C	D						1 medium	2 media
push	pull	push	pull							
cm²	cm²	cm²	cm²	bar	r.p.m.	dm³/min	kg	kg·m²	kg	kg
17.6	30.6	40.6	39.2	3-60	4000	3.0	25	0.065	0.4	1.5

* To be ordered seperately!
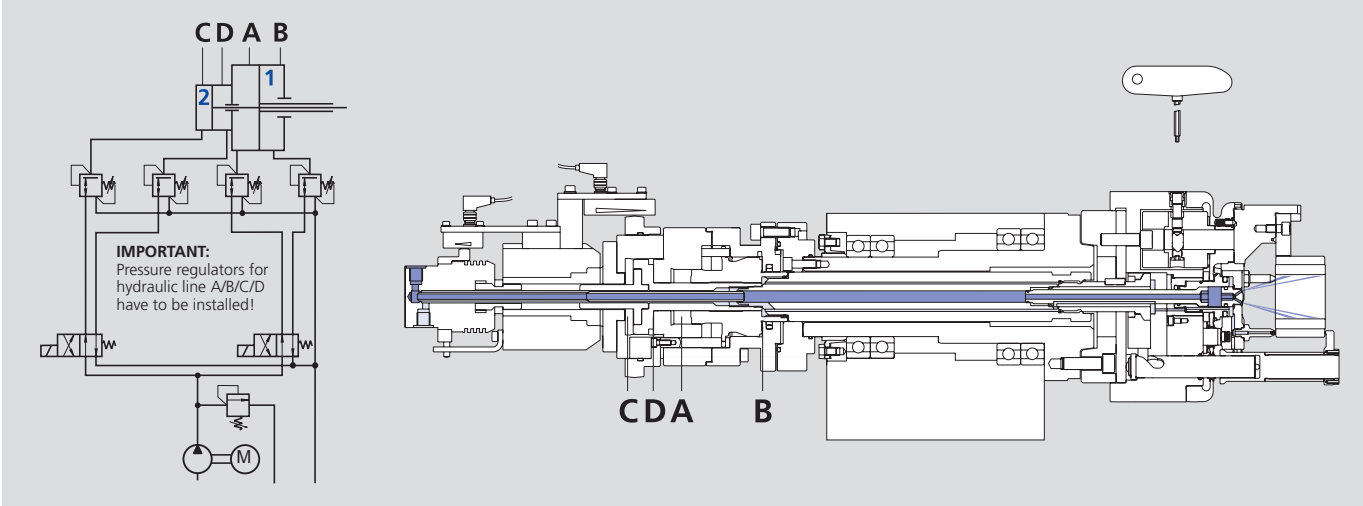
Installation